FITTING INSTRUCTIONS

ATTENTION: before carrying out any work on the exhaust, check that its surface has cooled so that it will not damage components, which are not heat-resistant (such as fairing, hoses, rubber sleeves, etc.), or the operator.

1. Remove the OE silencer(s)
2. Check that the mating surfaces are in good clean condition, slide the link pipe on to the original header, taking care not to damage the graphite gasket (if supplied) which should replace the OE gasket. Partially tighten the securing strap to allow a degree of further adjustment.
3. Slide the Leovince SBK silencer onto the link pipe, check the alignment of the mounting eyes for the springs and the alignment of the exhaust outlet to the rear of the silencer, and then link the parts together with the springs provided
4. Fit the carbon strap(s) to the silencer(s); mount spacers, washers and brackets (if any) as shown on the drawing and then secure by tightening nuts and bolts.
5. Tighten the various clamps which join the Leovince SBK link pipe(s) to the OE exhaust headers.
6. Start the engine, wait a few minutes until it reaches operating temperature, and check that there are no gas leaks.

IMPORTANT: During the first km of running, the exhaust system needs breaking-in; therefore, slight gas leakage might occur. After approximately 100 Km, check all the fasteners.

ADJUSTMENT:
This silencer has been developed by Leovince on an electronic test beud using a machine in perfect condition, and in standard trim.

MAINTENANCE:
From time to time, check all the brackets and fasteners, which could be affected by use (sound-deadening material, seals and other rubber parts) and replace them periodically.The silencer may be cleaned using gasoline, diesel oil or alcohol. Absolutely avoid the use of any kind of solvent.
It is normal for there to be some discolouration of the silencer, which is the result of heat and the nature of the materials used.

IT IS FORBIDDEN to modify silencers. Whatever form this may take, SITO GRUPPO INDUSTRIALE declines any responsibility for defects, problems, or malfunction, arising from the use of any product which has been modified or tampered with.

WE SUGGEST THE FITTING TO BE MADE BY PROFESSIONALS

TECHNICAL DRAWING
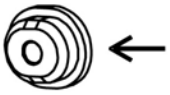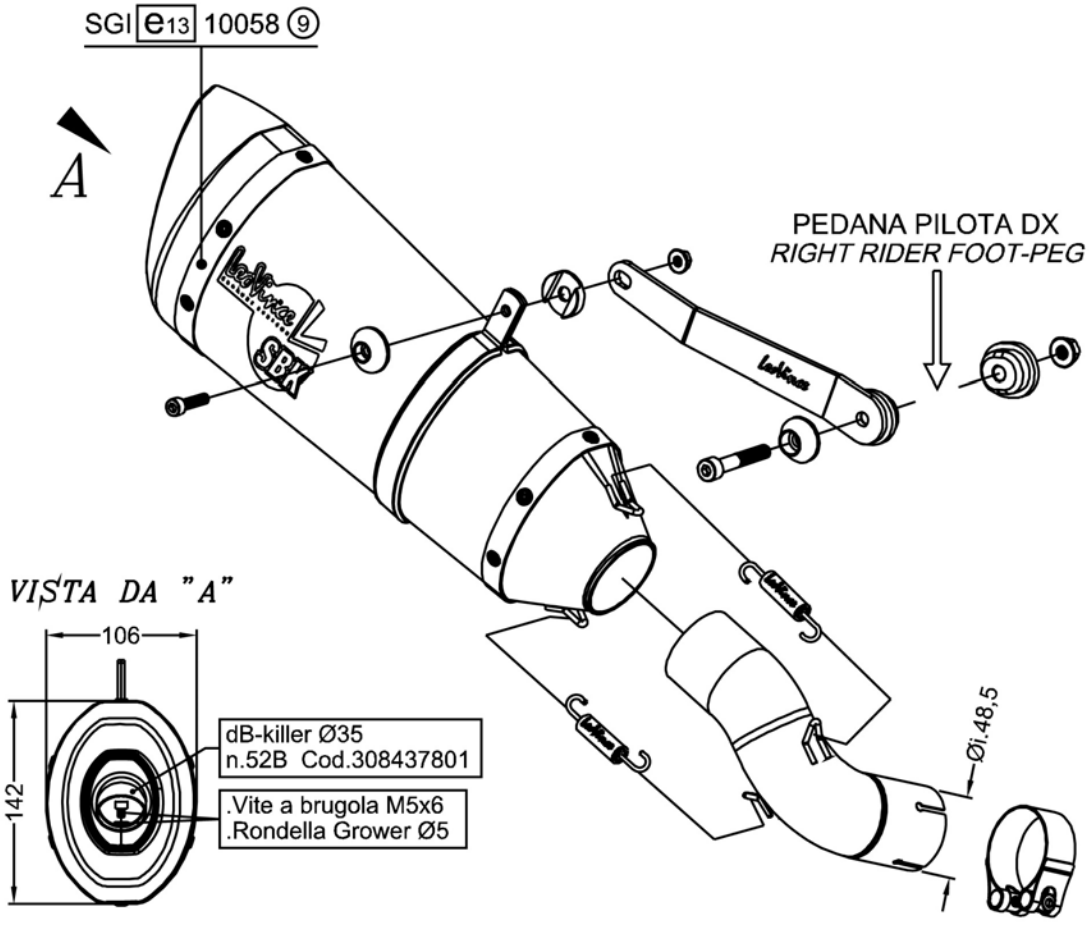
_Rimuovere definitivamente gli inserti in gomma dalla loro sede sulla pedana-pilota destra e sostituirli con i distanziali “LeoVince” in INOX.
_Definitively remove the rubber inserts from their place on the right rider foot-peg and replace them with the "LeoVince" inox spacers.
_Avant de monter l'échappement “LeoVince”, remplacer les pièces en caoutchouc qui se trouvent sur le repose-pied droit du pilote par les entretoises “LeoVince” en inox.
_Entfernen Sie unbedingt die Gummi-Einsätze von der rechten Fahrerfußraste und ersetzen Sie diese mit den LeoVince Inox-Distanzstücken.
_Al montar el escape “LeoVince” es necesario remplazar las piezas de goma situadas en la estribera derecha del piloto con los distanciales de inox “LeoVince”.